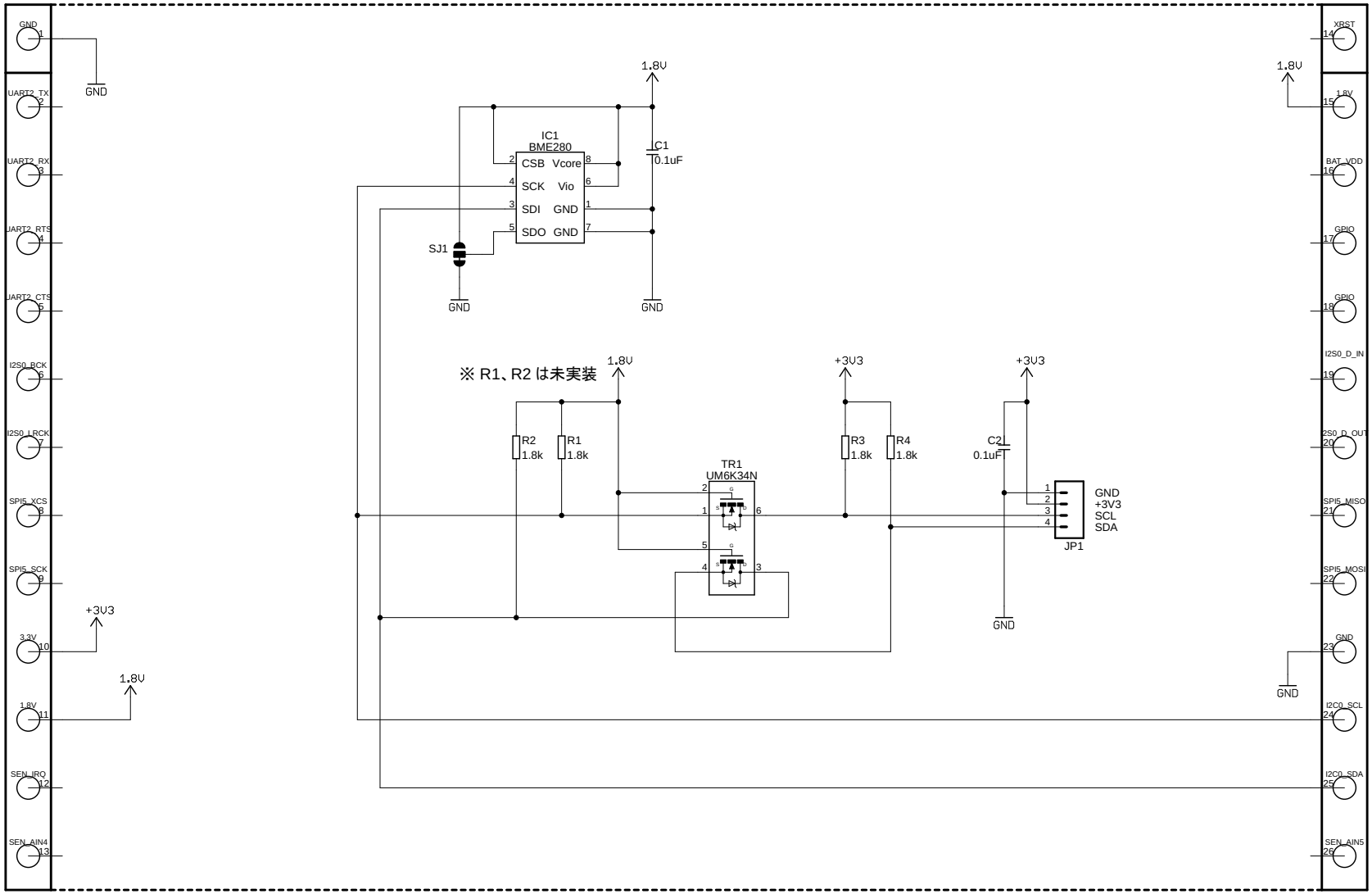

Switch Science, Inc.	
SPRESENSE_BME280	
2018/10/02 16:22	
Sheet: 1/1	