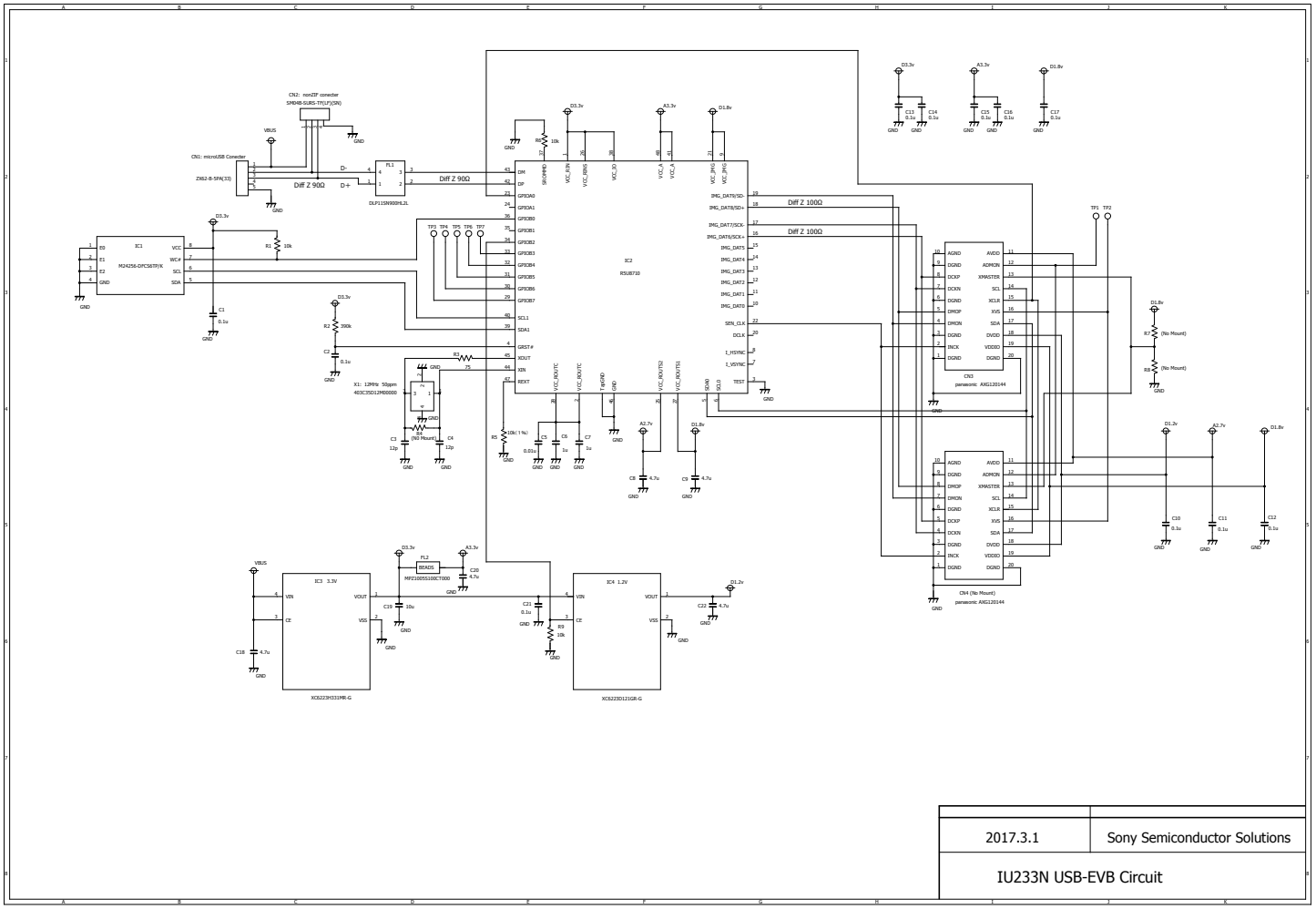

2017.3.1	Sony Semiconductor Solutions
IU233N USB-EVB Circuit	